UNESCO

Refurbishment of an occupied heritage office building.

CLIENT

UNESCO

TEAM

Patriarche (Architecture, Environmental Building Quality [EBQ], Engineering, General construction and cost assessment)
Partners:
Ragot Gilles, Eckersley O'Callaghan, MDP, Omega Alliance, Lamoureux, and Casso & Associés

KEYPOINTS

Renovation of facades.
Taking into account the existing heritage.
Conservation of geometries and atypical structures.
Thermal, hygrometric and acoustic comfort.
Implementation of PMR accessibility.
Creation of gardens.

ENVIRONMENTAL PERFORMANCE

TARGET : BBC Effinergie Rénovation.
ENERGY : 63% Ubat improvement and 70% improvement in regulatory energy consumption.
REUSE of materials (between 7 and 15%).

UNESCO Building V is located in the 15th arrondissement of Paris near to UNESCO's headquarters on the Place de Fontenoy.

Building V is the work of Bernard Zehrfuss and Jean Prouvé, who together designed the structural frame and the façade. As the building remains in exceptional condition, the aim of the project is to explore renovating the facilities whilst preserving the existing structure and facade.

This near-original state of preservation is also evident in its technical operation facilities, which date from the mid-1960s in both their design and installation. The aim is to give the building longer life, ensuring that it complies with fire safety and accessibility requirements, and in the long term to have technical operation facilities that comply with comfort, energy saving and low-carbon building standards.

The building's main facade is to be fully restored to its original state, with new patio and ground floor facades that overlook the forecourt and the garden. The future building envelope will also incorporate all of the statutory requirements for 2009 BBC (low energy consumption) renovation certification, in particular with regard to controlling solar gain, ensuring daylight, and providing thermal protection to limit the building's energy consumption.

Typology
Refurbishment and office

Surface area
16,711 m² of floorspace

Construction cost
33 M€

Location
Paris, France

Status
Delivery 2023

Allocation mode
Public Works Management



An improved and strengthened façade concept

These technical updates enhance the performance of the original work, providing a more faithful and improved experience.

Insulation

With a building that dates back to the 1960s, well before the first thermal regulations were put in place, a number of technical challenges were identified: the total absence of insulation on the vertical walls, the lack of thermal breaks, and the presence of single-glazed windows all reduce the building's thermal performance, making it very energy-consuming. To improve the building's energy efficiency, an insulation system was integrated into the façade modules and thermal bridge breakers installed in the joinery.
This involved:

- Reworking the prefabricated façade elements in the spirit of Jean Prouvé
- Replacing all external joinery (glazing, curtain walls, frames, doors, etc.)
- Installing vertical thermal linings
- Treating thermal bridges
- Installing solar protection

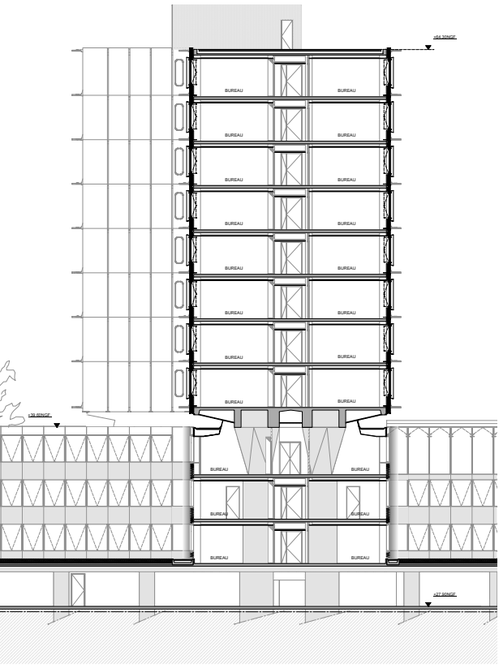

Waterproofing

All the waterproofing on the existing building was also in poor condition. The flat roofs had watertightness problems at weak points such as the upstands and the junction areas between the side wings and the superstructure. At certain locations, design faults or problems with the drainage of rainwater were causing water stagnation, also affecting the building's thermal performance. Several measures were needed to ensure its permeability and performance:

- Redoing the waterproofing on the flat roofs of the superstructure and low-rise buildings, with the addition of vegetation
- Re-sealing the patios
- Thermal lining (high and low floors, as well as walls opening onto unheated premises)
- Treating thermal bridges
- Renovating the main entrance, meeting room and sports hall roofs
- Facilitating the upkeep and maintenance of the superstructure facades and patios, primarily from inside the spaces
- Protecting and upgrading traffic on the terraces (railings, footbridges, etc.)

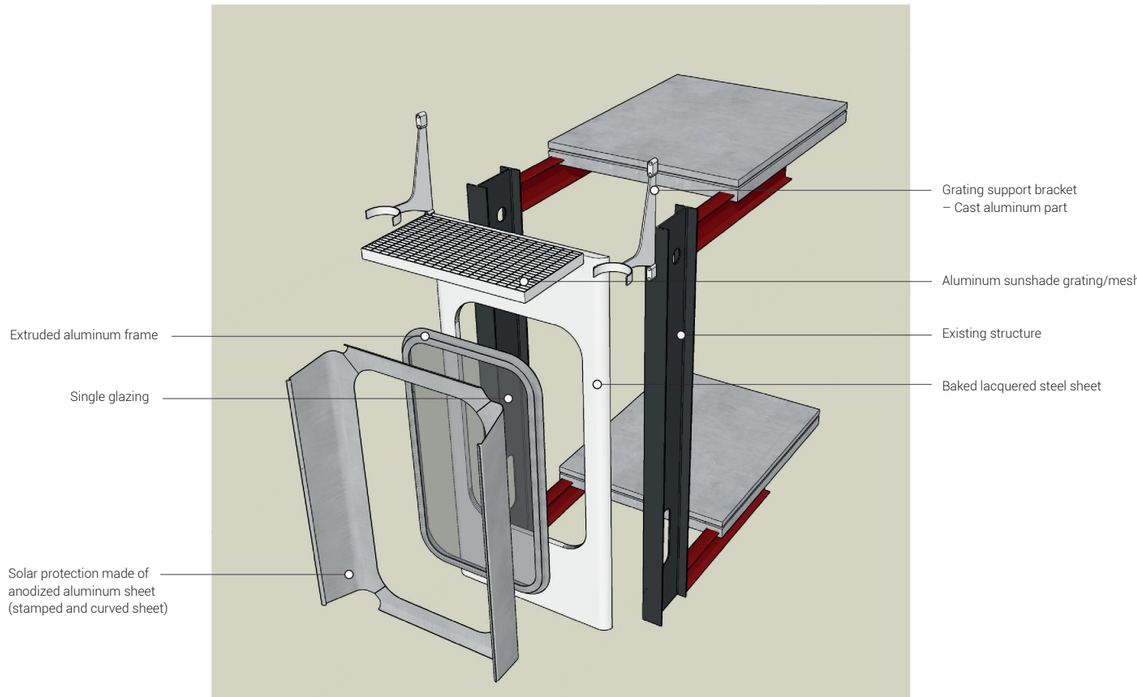

Existing state of a façade module

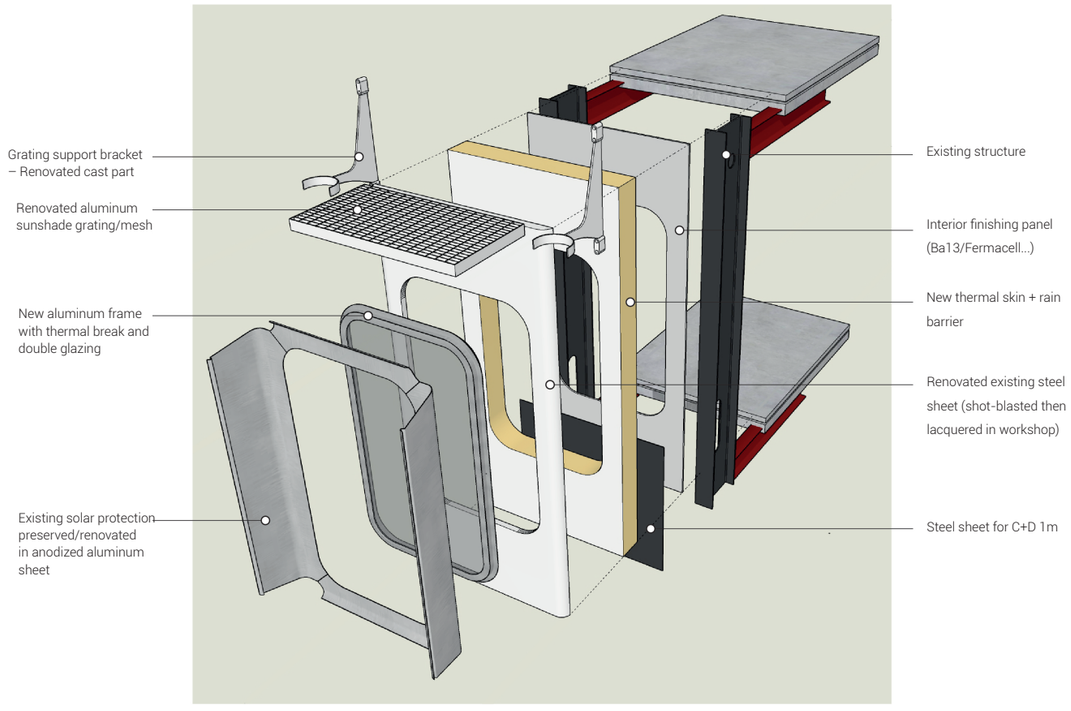

Projected principle of a façade module

A durable and efficient historic building

This heritage building renovation prioritises energy efficiency and user comfort.

Designed from the outset with a bioclimatic approach, our mission was to improve the performance of the building while maintaining the original intentions. As energy performance standards have evolved since the building was first constructed, an updated analysis and diagnosis was vital in ensuring that the construction components could be used and optimised as effectively as possible.

Energy level and target label:

As part of the renovation, the building is subject to RT2012, the thermal regulations currently in force for new buildings in France.

The energy and environmental performance of the building also enables it to meet the targets set by the Paris Climate and Energy Plan, and the HPE BBC-EFFINERGIE RéNOVATION 2009 label.





Comfort and energy efficiency:

With a dual objective, refurbishment of this office building encompasses updating to meet new standards and energy efficiency needs, revealing sustainable and responsible architecture, while offering greater comfort for its users. The following key stages outlined the process to be followed to achieve these ambitions:

- Rethinking facades
- Day/night phase shift
- Thermal insulation
- Managing solar gain
- Bio-sourced materials
- Renovating roofs
- Renewable energy
- Optimising ventilation

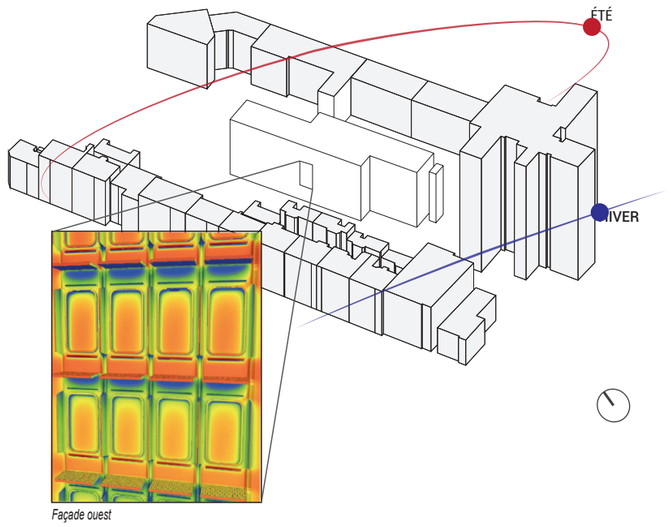

Façade ouest

Strategic, controlled solar gain

Solar gain is one of the main contributors to heat in buildings, and has a direct impact on comfort and the energy requirements of the cooling system. By analysing solar irradiation, it is possible to assess the effectiveness of solar protection. The west facade was particularly exposed. Through refurbishment, solar radiation was reduced by 13%.

The results show the cumulative solar energy per unit area (kWh/m2) over an entire year. They are visualised in a colour gradient on the 3D model of the building and can be interpreted as follows: blue indicates low exposure, green/yellow areas acceptable solar gain, and orange/red, walls receiving a large amount of heat.



UNESCO

Typology
Refurbishment and office

Construction cost
33 M€

Status
Delivery 2023

Surface area
16,711 m² of floorspace

Location
Paris, France

Allocation mode
Public Works Management